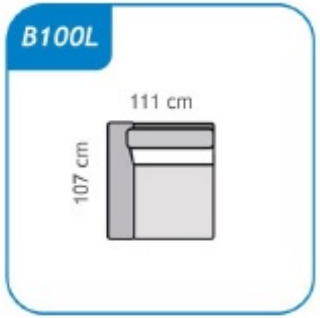
B100L
111 cm
107 cm

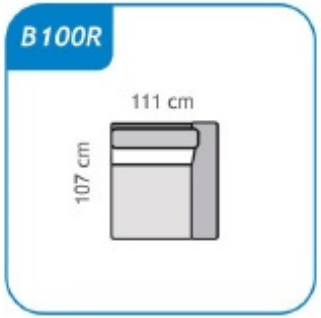
B100R
111 cm
107 cm

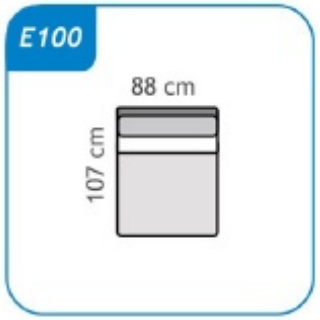
E100
88 cm
107 cm

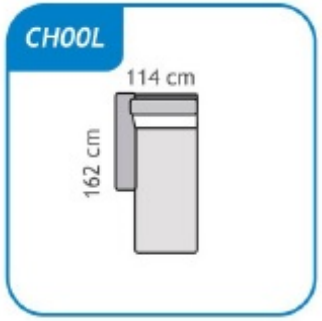
CH00L
114 cm
162 cm

CH00R
114 cm
162 cm

EK01
125 cm
125 cm

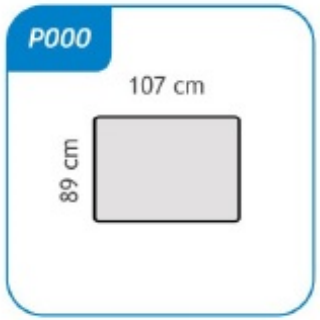
P000
107 cm
89 cm

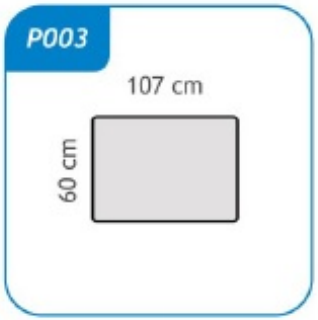
P003
107 cm
60 cm

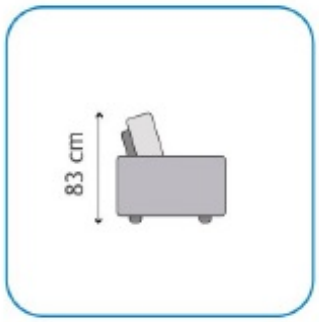
83 cm